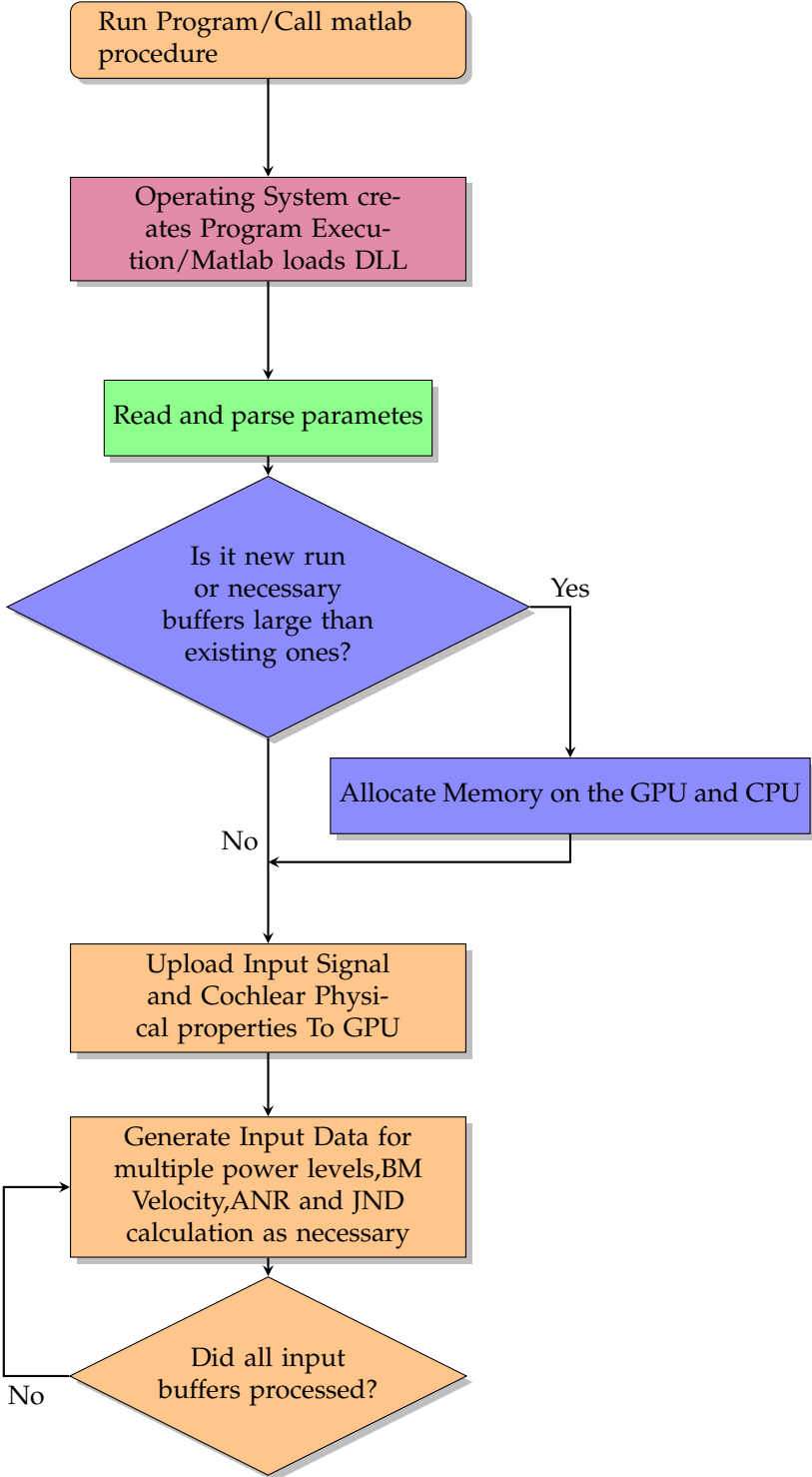
Run Program/Call matlab procedure
Operating System creates Program Execution/Matlab loads DLL
Read and parse parametes
Is it new run or necessary buffers large than existing ones?
Yes
Allocate Memory on the GPU and CPU
No
Upload Input Signal and Cochlear Physical properties To GPU
Generate Input Data for multiple power levels,BM Velocity,ANR and JND calculation as necessary
Did all input buffers processed?
No

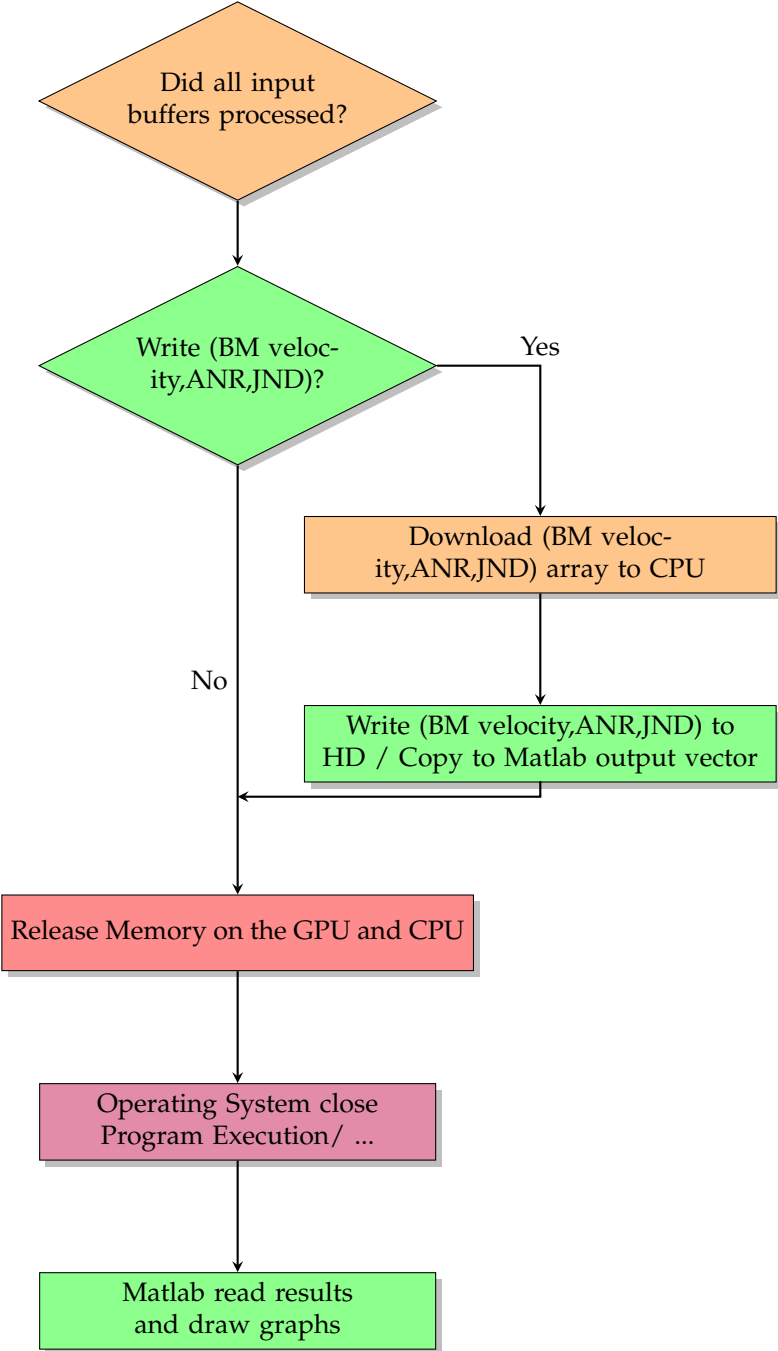
Did all input buffers processed?
Write (BM velocity,ANR,JND)?
Yes
No
Download (BM velocity,ANR,JND) array to CPU
Write (BM velocity,ANR,JND) to HD / Copy to Matlab output vector
Release Memory on the GPU and CPU
Operating System close Program Execution/ ...
Matlab read results and draw graphs