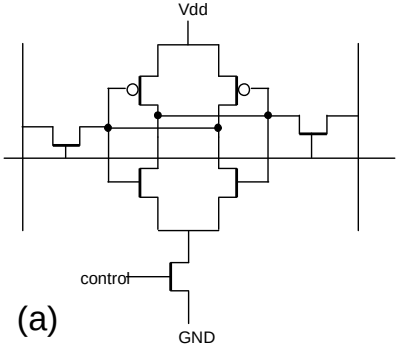
Vdd
control
GND
(a)

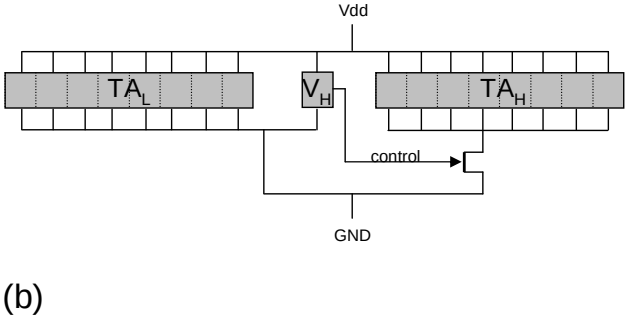
Vdd
TA_L
V_H
TA_H
control
GND
(b)