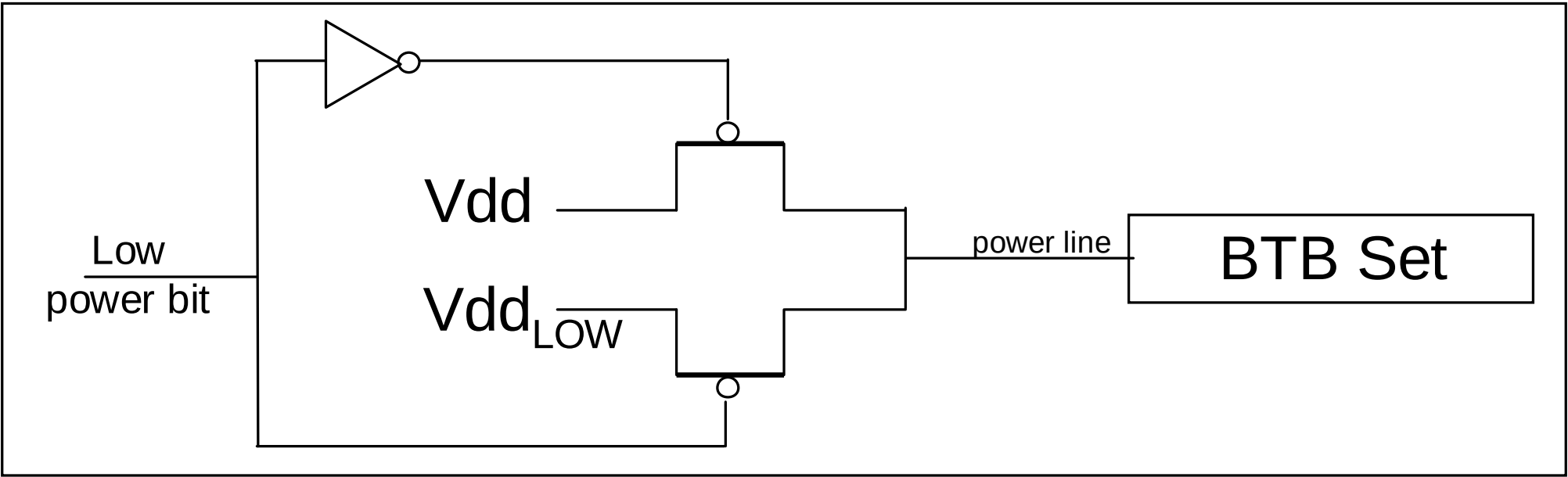
Low
power bit
Vdd
Vdd$_{LOW}$
power line
BTB Set