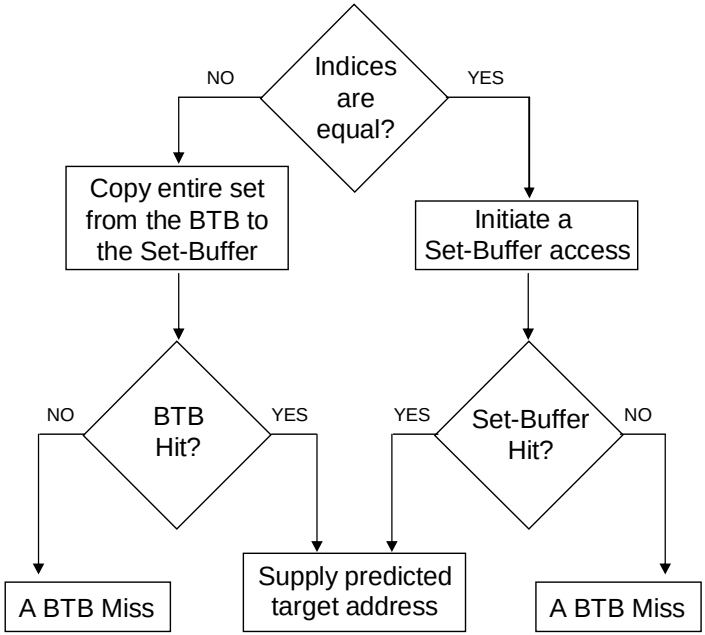
Indices are equal?
NO
YES
Copy entire set from the BTB to the Set-Buffer
Initiate a Set-Buffer access
BTB Hit?
NO
YES
Set-Buffer Hit?
YES
NO
A BTB Miss
Supply predicted target address
A BTB Miss

(a)

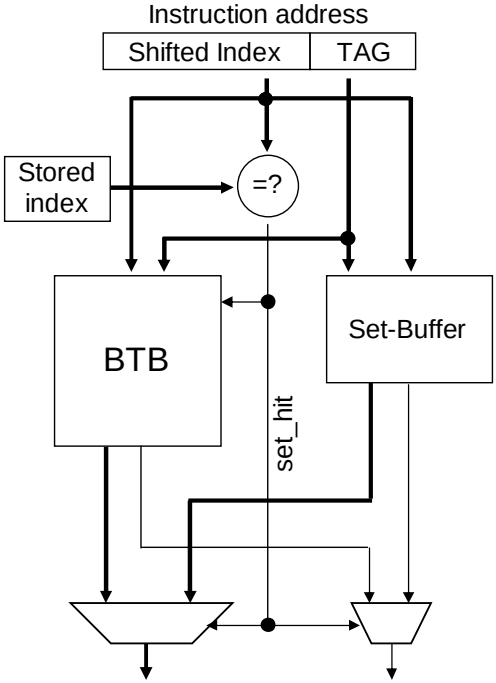
Instruction address
Shifted Index
TAG
Stored index
=?
BTB
Set-Buffer
set_hit
Predicted Target Address
BTB hit

(b)