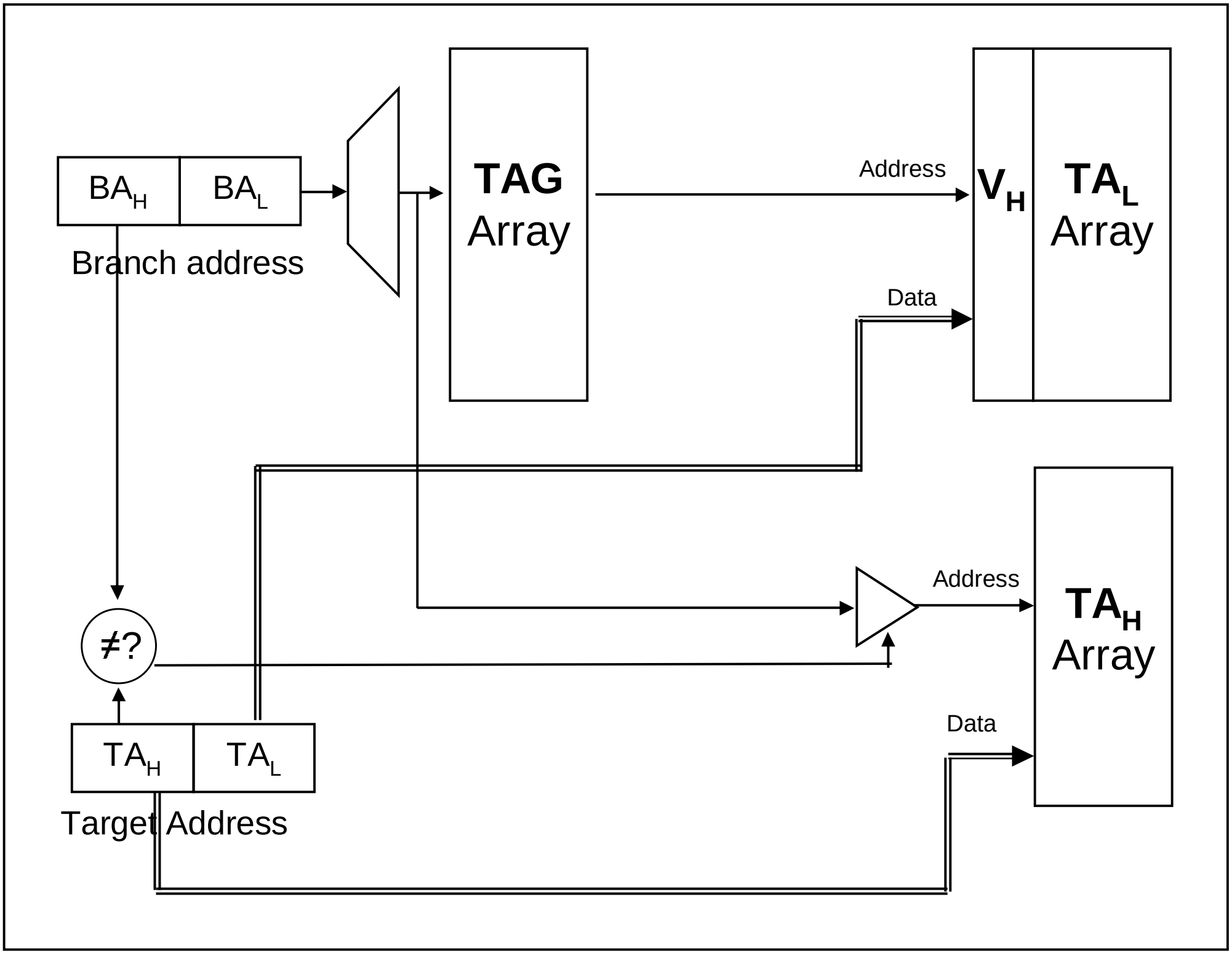
BA_H
BA_L
Branch address
TAG
Array
Address
V_H
TA_L
Array
Data
Address
TA_H
Array
≠?
Data
TA_H
TA_L
Target Address