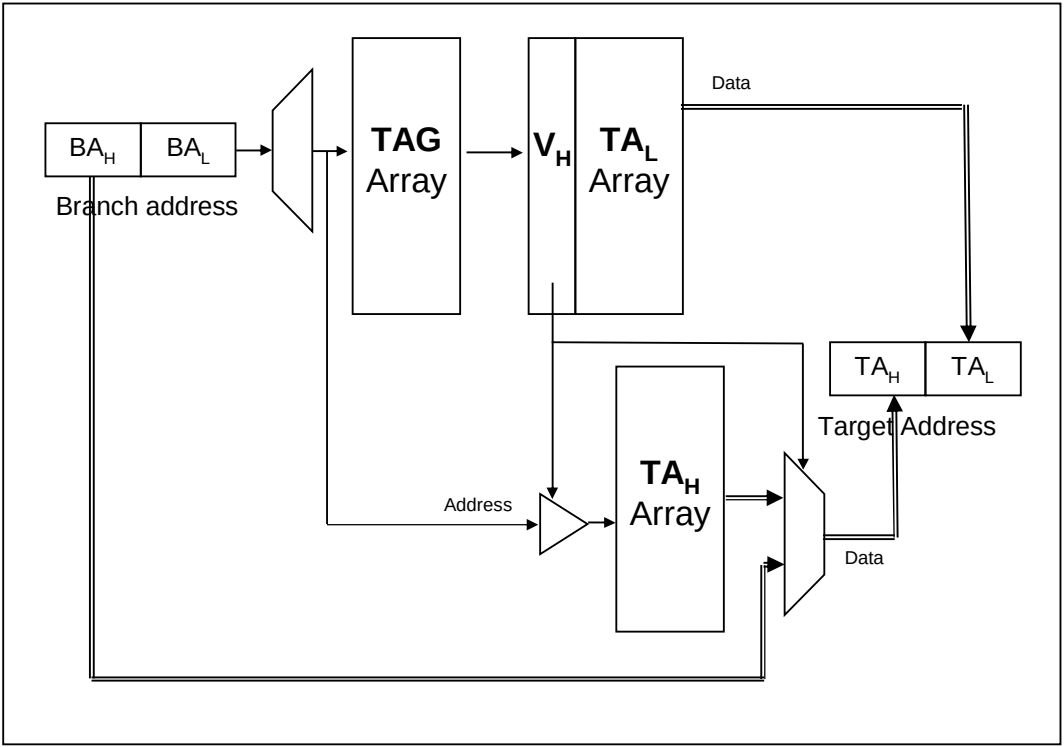
BA_H
BA_L
Branch address
TAG Array
V_H
TA_L Array
Data
TA_H
TA_L
Target Address
TA_H Array
Address
Data